EMC Level 0Trigger

A. Vander Molen MSU

Definitions

- EMC tower: 0.05x0.05 unit in Barrel geometry. Signal generated by PMT
- Trigger tower: 4x4 patch with 0.2x0.2 coverage generated in hardware from EMC towers
- High tower: Highest EMC tower in Trigger tower generated in hardware
- Jet patch: 1.0x1.0 patch generated from Trigger tower patches in Level 0 trigger NEW!!
- All Signals are in P_t

EMC Trigger Requirements

- See http://www.star.bnl.gov/STAR/html/trg_l/EMC/Requirements/emcreq.pdf
- Three selectable levels of Trigger on
  - Trigger tower
  - High tower
  - Ratio of High/Trigger tower
  - Jet patch
  - Total P_t

PreTrigger Components

- PMTs adjusted to give P_t
- ADC generate 12 bits
  - Upper 10 ten bits used for trigger
    - Top 8 for Trigger tower
    - User selects upper or lower 6 bits of 10 for High tower(CHANGED. After meeting this was changed to any six contiguous bits)
- Individual PMTs maskable
- No other user options
- 300 Tigger tower/High tower pairs generated with 6 bits each(x2)

IDENTIFICATION OF COMPONENTS FOR ROUTING AND TAGGING
WSU, EMC, 3/5/99, JOSE RISO

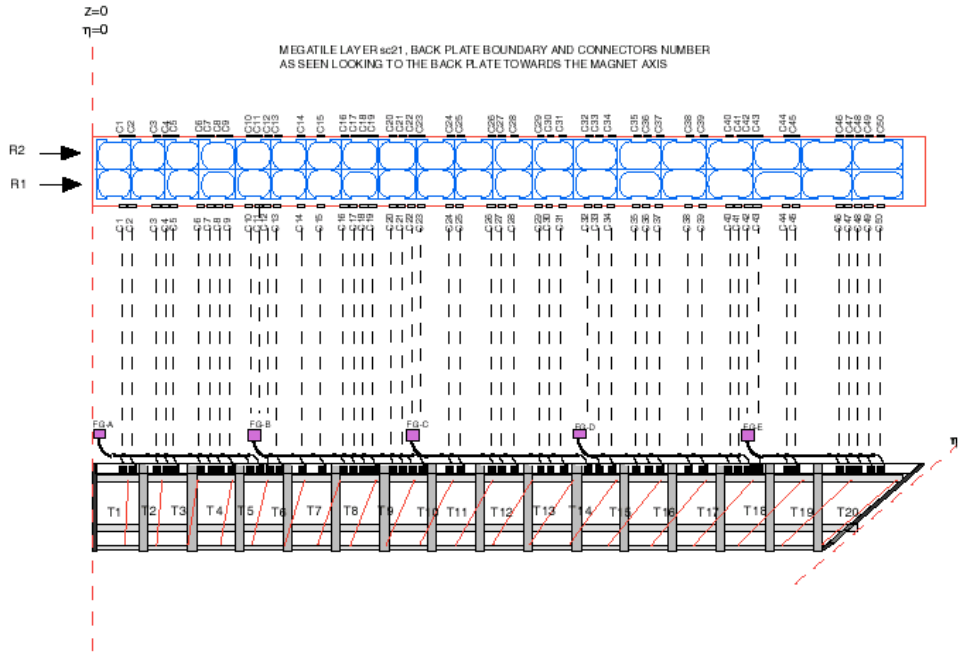

SIDE VIEW OF THE EMC MODULE SHOWING THE NUMBER AND POSITION OF CONNECTORS IN RELATION TO TOWERS AND STRAPS, ALSO IS SHOWN THE POSITION OF THE FIBER GUIDES IN RELATION TO THE OPTICAL CONNECTORS AND NUMBER OF FIBER BUNDLES ROUTED THROUGH EACH GUIDE.

To give one example of how we can follow routing paths of fiber bundles let's suppose that we want to identify the route of a fiber or fiber bundle that starts at the photomultiplier box PMB# and finishes in tower T4 (Tower 4) in R1 (Row) of the module M60.

The path is:

PMB#>FG30BW>R1>C#>T4

7

ROUTING AND TAGGING NAMING CODE
EMC, WSU, JOSE RISO, 10/26/99

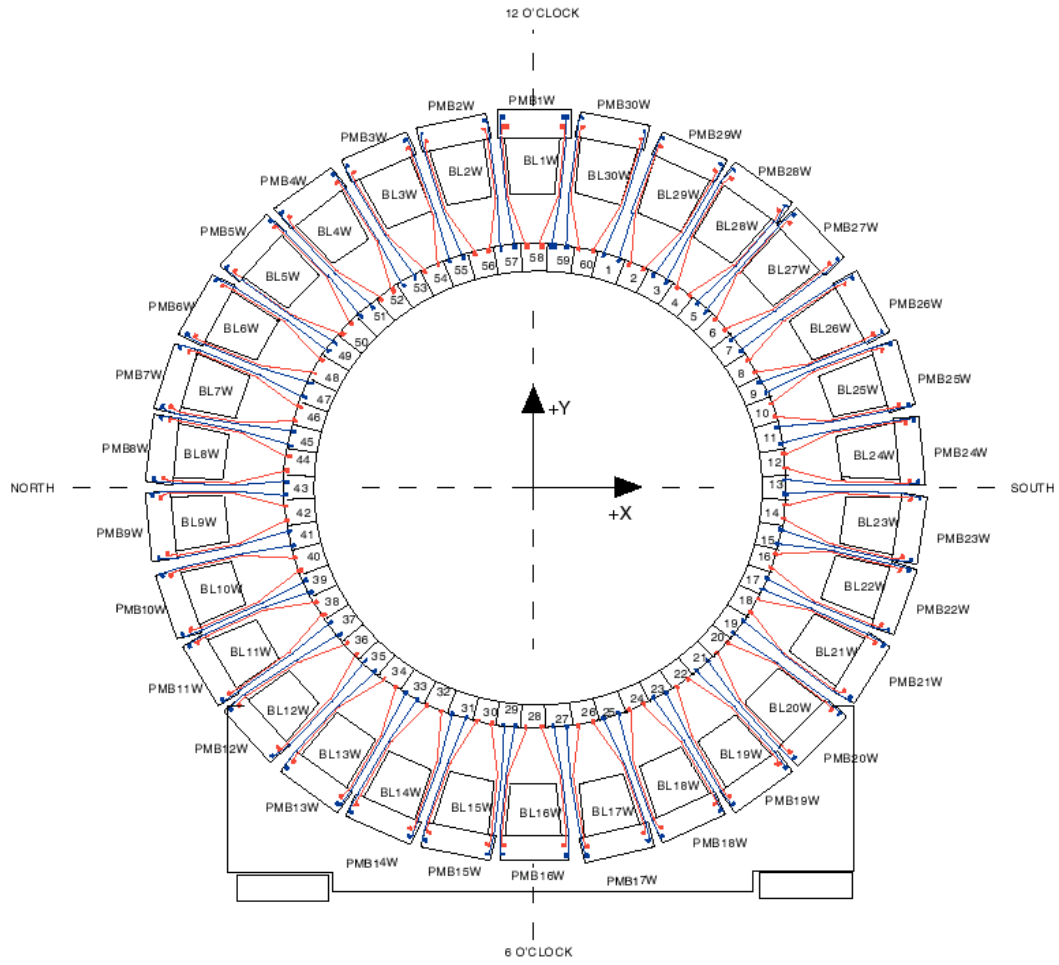

EMC FACE OF THE STAR BARREL AS SEEN FROM +Z (WEST FACE) SHOWING THE DISTRIBUTION OF PMT'S BOXES AND CLEAR FIBER BUNDLES

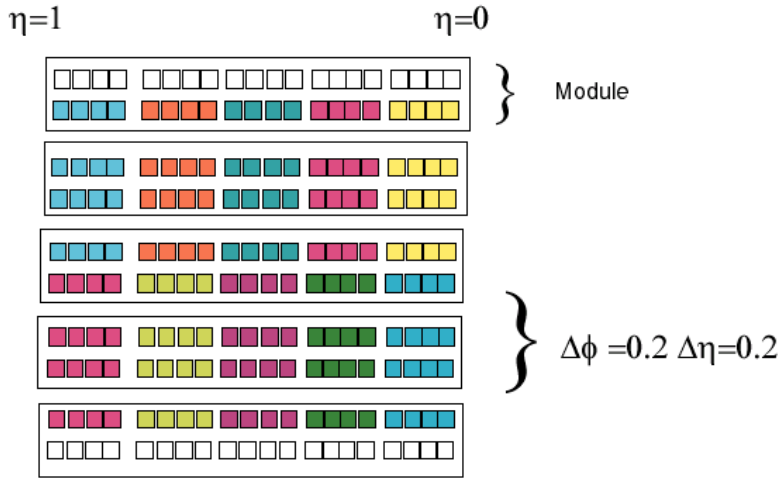

West

East

Layout of the Ten Trigger Towers

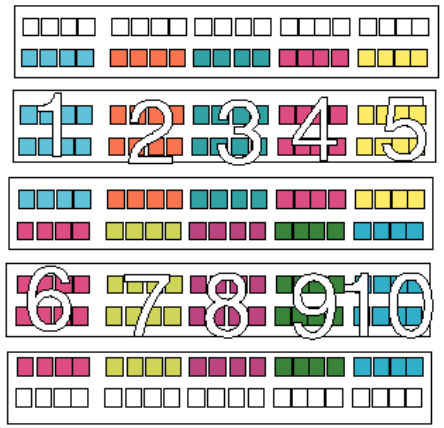

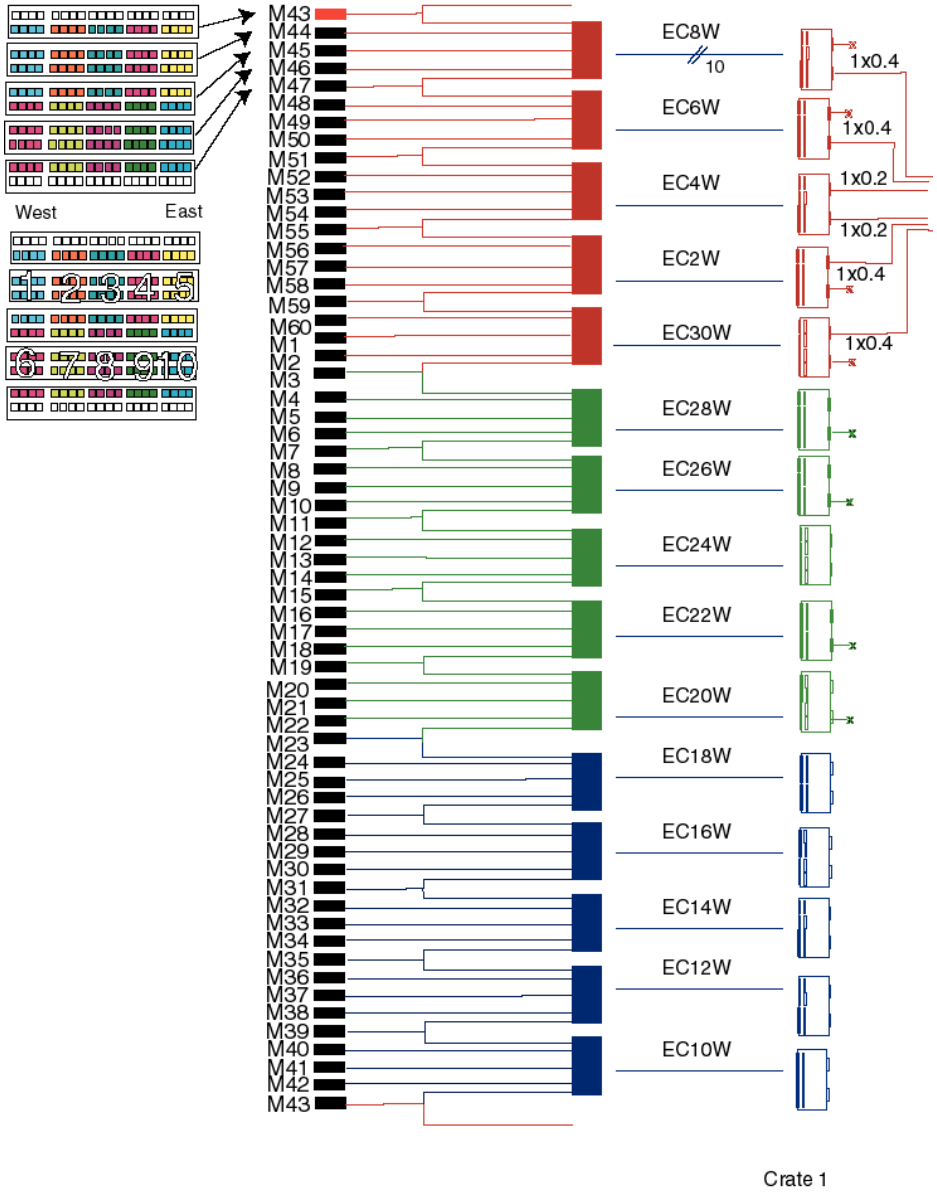
West
East
EC8W
10
1x0.4
EC6W
1x0.4
EC4W
1x0.2
1x0.2
EC2W
1x0.4
EC30W
1x0.4
EC28W
EC26W
EC24W
EC22W
EC20W
EC18W
EC16W
EC14W
EC12W
EC10W
Crate 1

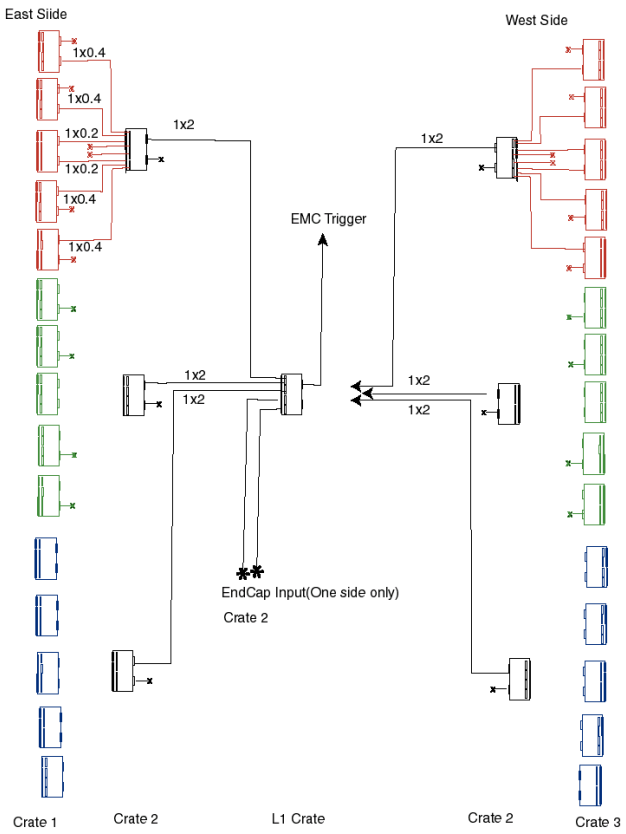
East Siide
West Side
1x0.4
1x0.4
1x0.2
1x0.2
1x0.4
1x0.4
1x2
1x2
EMC Trigger
1x2
1x2
1x2
1x2
**
EndCap Input(One side only)
Crate 2
Crate 1
Crate 2
L1 Crate
Crate 2
Crate 3

Level 0 Trigger-Layer 1

- 30 TDSMI/DSM
  - 10 pairs of inputs
- High tower thresholds checked (2 bits out)
  - Implies order of requested levels
- Trigger tower thresholds checked (2 bits out)
- Ratios generated and thresholds checked (2 bits out)
- 1.0x0.4 patches generated (10 bits out)
  - OR 2 1.0x0.2 patches(every third)

Level 0 Trigger-Layer 2

- 6 DSMS with input of
  - 4 1.0x0.4 patches
  - 2 1.0x0.2 patch
  - 5 sets of 6 bits of threshold information
- OR threshold information (6 bits out)
- Generate 2 Jet patches and check thresholds (2 bits out)
- Generate Total P_t (8 bits out)

Level 0 Trigger-Layer 3

- 1 DSM with input of
  - 6 1.0x 2.0 P_t patches
  - 6 sets of 8 bit thresholds
  - EndCap
- OR threshold bits
- Generate Total P_t and check thresholds

Level 3 Output

- What are the output bit(s) To STAR trigger?
  - 10 bits (default)
  - EndCap
- Other Options
  - EndCap-Barrel
  - Back to Back phenomena
    - Jet-Jet
    - Gamma-Jet
- Needs to be thought about

Status

- Hardware being installed
- Code
  - Single threshold High tower version implemented
  - V1.0 written but not implemented
  - V1.0 must be rewritten for new Jet patch

Last Run

Enhancement of High pT Tracks
~50x for pT >2.0 GeV/c

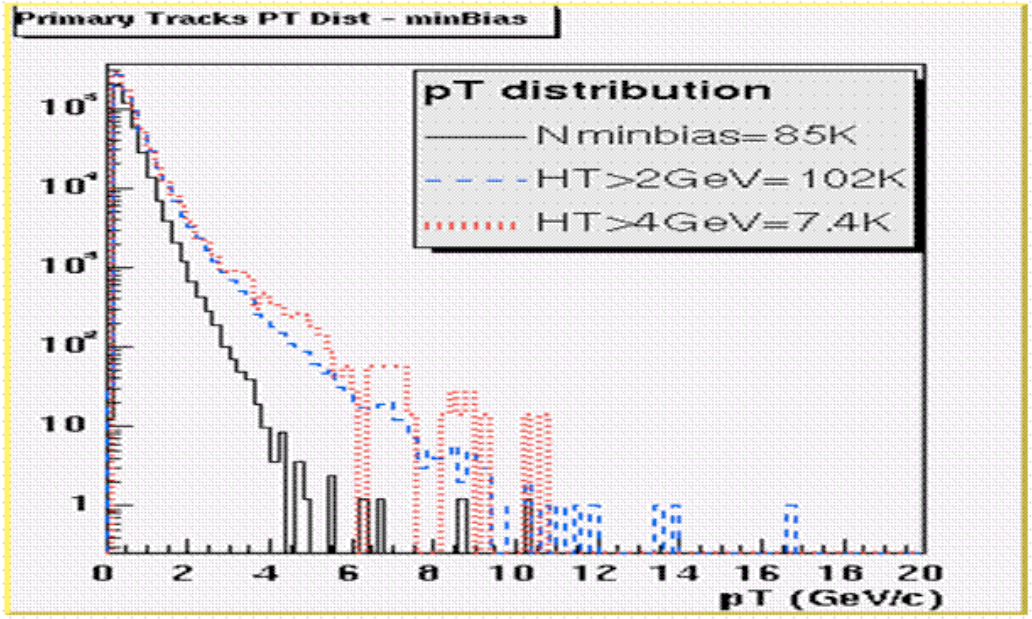

Mirko Planinic (IUCF)

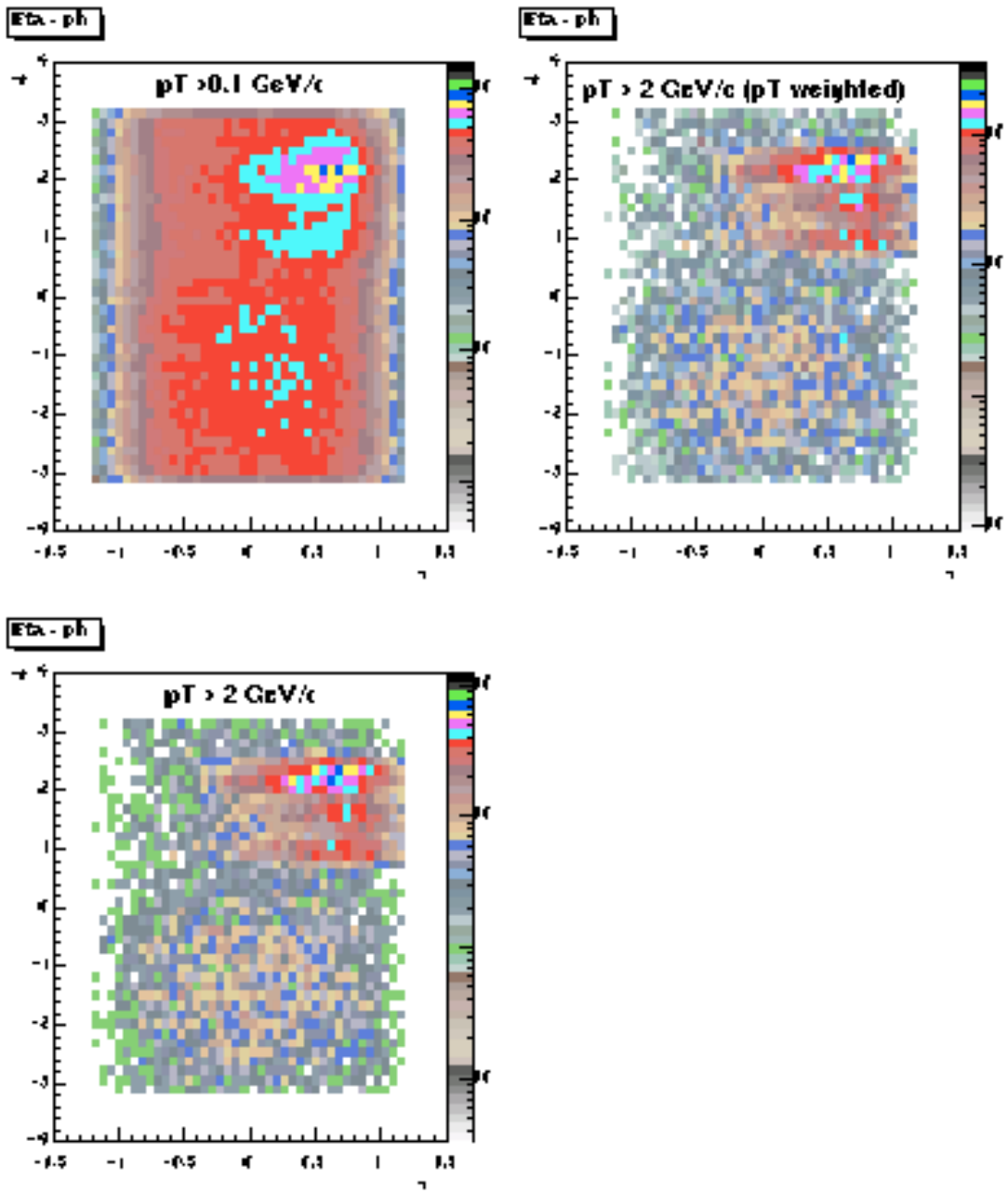
Eta - ph
pT >0.1 GeV/c
Eta - ph
pT > 2 GeV/c (pT weighted)
Eta - ph
pT > 2 GeV/c

High Tower Trigger Enhancement

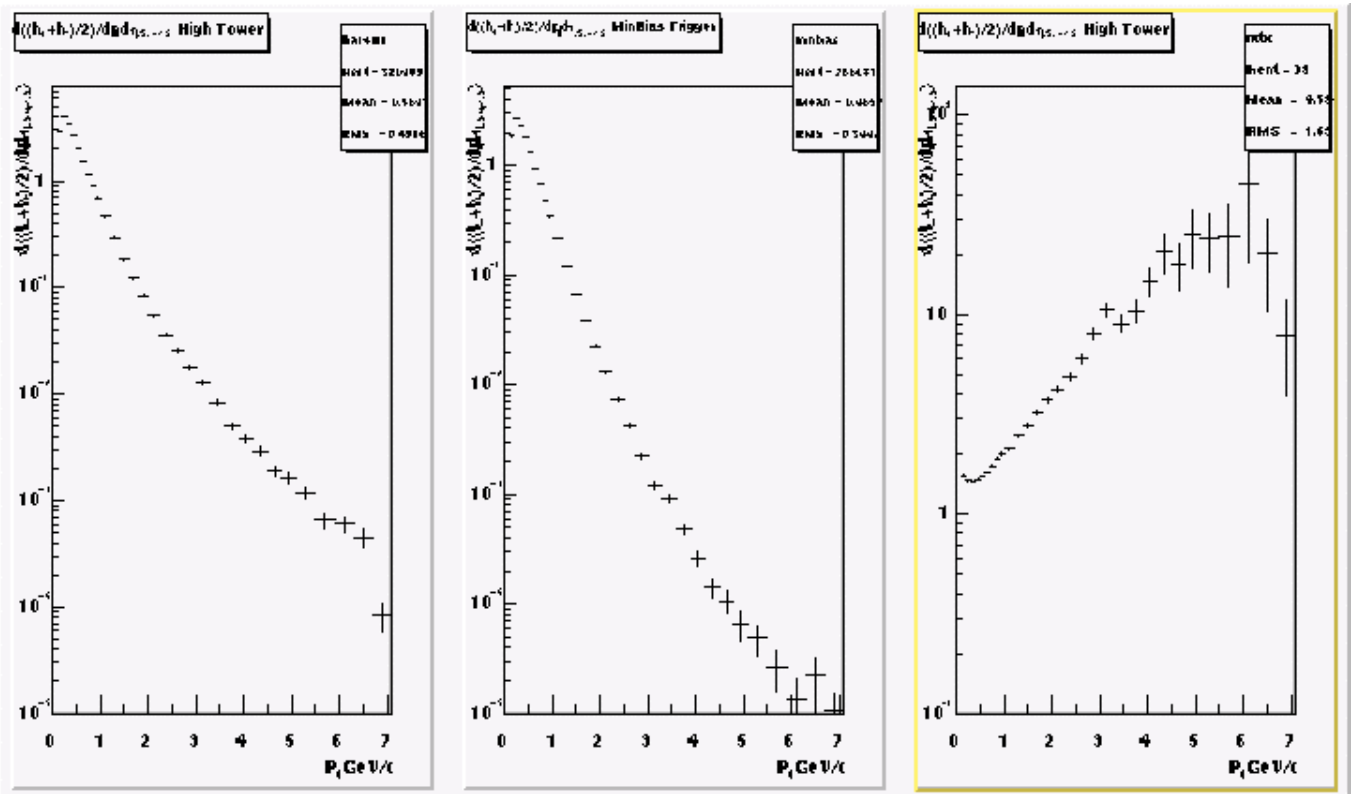

High Tower Trigger Spectra per event

ppMinBias Raw Spectra per event

Ratio of Two Triggers

Notice enhancement of ~ 20 around GeV/c

Jennifer Klay for Jon Gans – STAR Analysis Meeting

Level 0 Trigger Studies

- Westfall, et. al.
- ???

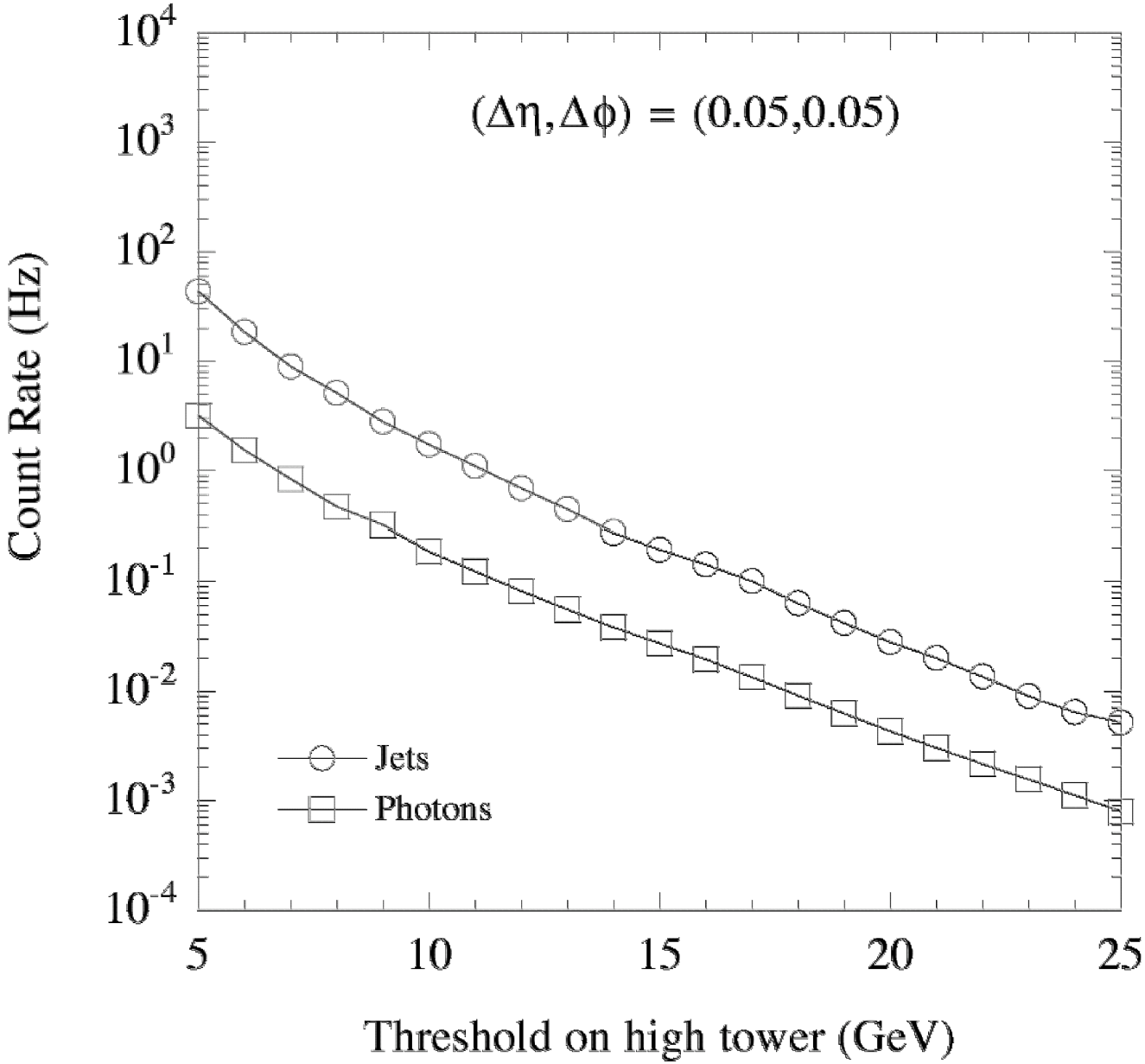
$(\Delta\eta,\Delta\phi) = (0.05,0.05)$
Count Rate (Hz)
10^4
10^3
10^2
10^1
10^0
10^{-1}
10^{-2}
10^{-3}
10^{-4}
5
10
15
20
25
Threshold on high tower (GeV)
Jets
Photons

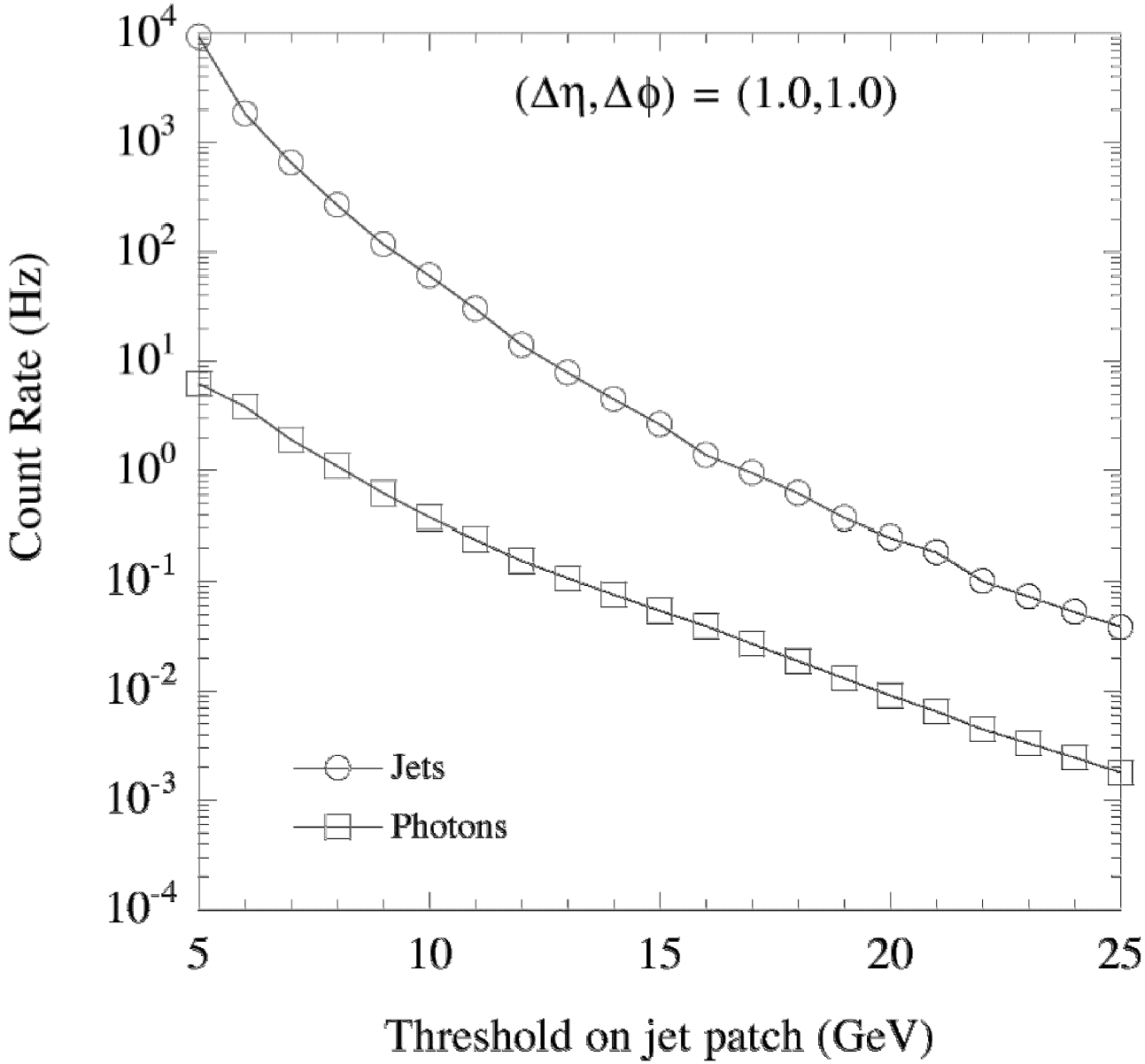
$(\Delta\eta,\Delta\phi) = (1.0,1.0)$
Count Rate (Hz)
10^4
10^3
10^2
10^1
10^0
10^{-1}
10^{-2}
10^{-3}
10^{-4}
5
10
15
20
25
Threshold on jet patch (GeV)
Jets
Photons

ToDo

- Finish building detector/electronics
- Install Trigger hardware/cabling
- Rewrite/Install V1.0 Trigger code
- Define next run's trigger needs