THIS SCHEMATIC IS FOR DEVICE
XC3190A-1PQ160__160 PINs
PACKAGE

20 BIT INPUT LATCHED FROM THE
DISCRIMINATORS

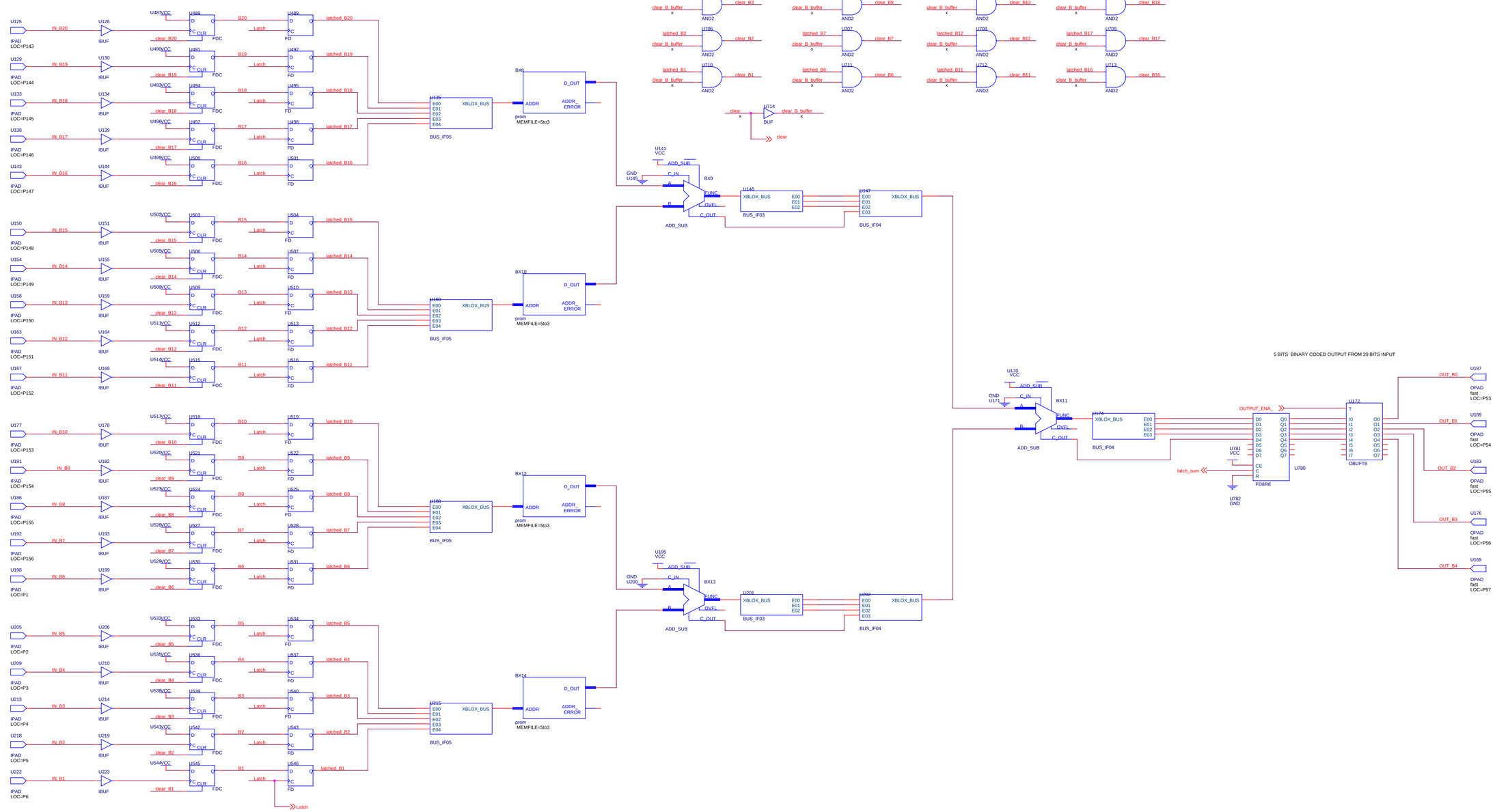

Engineer:	C.VU		
Drawn by:	C.VU		
Checked:	C.VU		
Prod App:	F.BIESER		
Cat Code:			
Scale:	NOT TO SCALE		

LAWRENCE BERKELEY NATIONAL LABORATORY
UNIVERSITY OF CALIFORNIA
RHIC -- STAR PROJECT

S/S:	TPC – FRONT END ELECTRONIC		
Title:	ADD_3120.DSN		
LBNL D/N	NOT AVAILABLE YET	Rev:	B
RHIC D/N	NOT AVAILABLE YET	Rev:	
STAR D/N	TRG122-D-4_2	Rev:	
File Name			
Date	Friday, March 10, 2000	Size: D	Page 1 Of 1