THIS SCHEMATIC IS FOR DEVICE
XC3190A-1PQ160C___160 PINs PQ PACKAGE

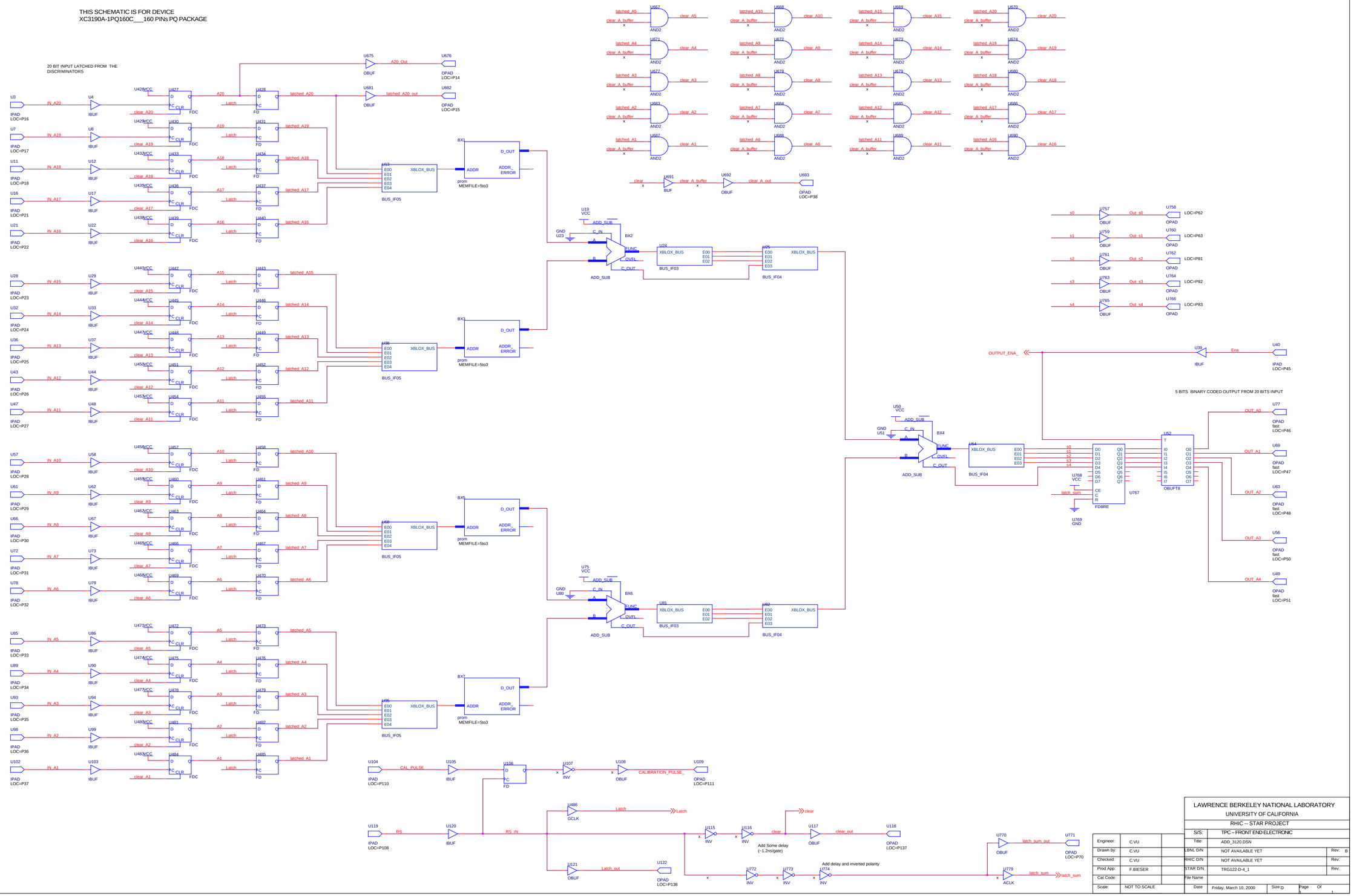

LAWRENCE BERKELEY NATIONAL LABORATORY UNIVERSITY OF CALIFORNIA			
RHIC -- STAR PROJECT			
S/S:	TPC – FRONT END ELECTRONIC		
Title:	ADD_3120.DSN		
LBNL D/N	NOT AVAILABLE YET	Rev:	B
RHIC D/N	NOT AVAILABLE YET	Rev:	
STAR D/N	TRG122-D-4_1	Rev:	
File Name			
Date	Friday, March 10, 2000	Size: D	Page 1 Of 1
Engineer:	C.VU		
Drawn by:	C.VU		
Checked:	C.VU		
Prod App:	F.BIESER		
Cat Code:			
Scale:	NOT TO SCALE		