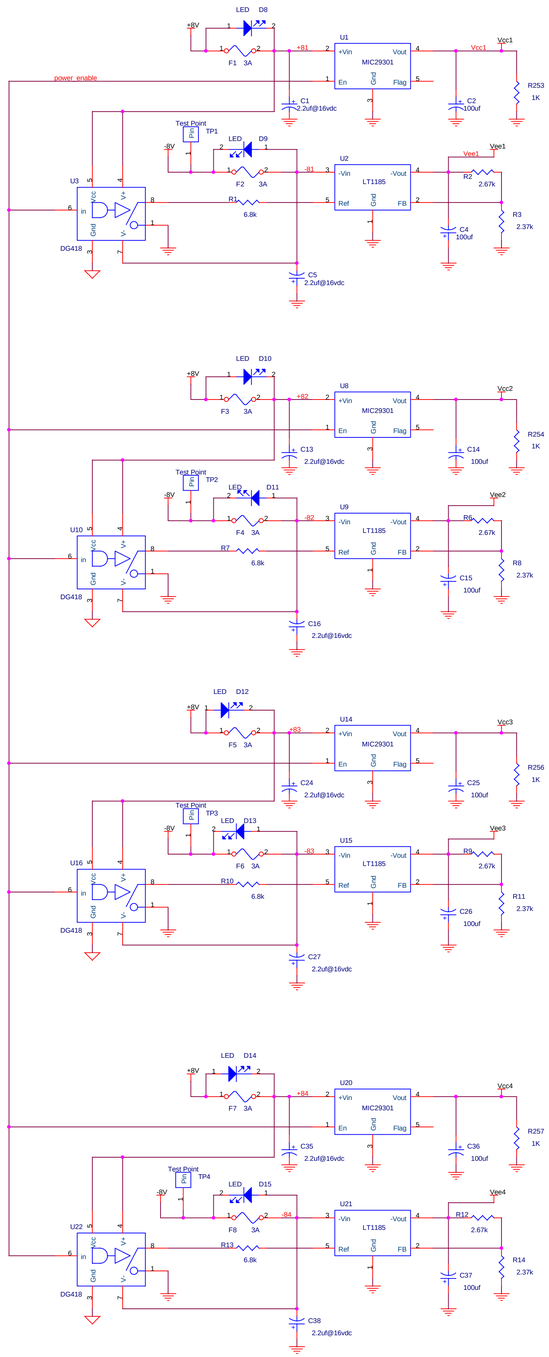

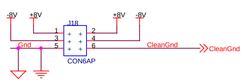

THESE 2 GND PLANES ARE CONNECTED TOGETHER AT THE POWER IN CONNECTOR WITH HEAVY COPPER VIAS

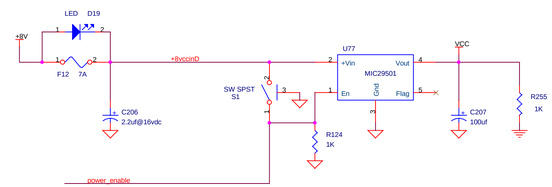

+5V Current = (275 + 150 sas) 425 ma per MWPC FEE BD with 90ds031 driver

-5V Current = (35 + 280 sas) 315 ma per MWPC FEE BD

Number of Regulators used on SEC bd :

Use 1 ea of +/-5V @ 3A regulator for every 4 MWPC FEE boards
(for a total of 4 +5v and 4 of -5v)

Use 1 ea of +5V @ 3A regulator for +5v Quiet on SEC board

Use 1 ea of +5V @ 5A regulator for +5v TTL on SEC board

Use 1 ea of -5V @ 3A regulator for -5v on SEC board

THIS SEC_CONT7.DSN IS THE REV B OF THE FIRST PROTOTYPE PCB GOT BACK ON 1-19-99 (SEC_CONT5.DSN)

D:\TEMP\FROM CHINH VU\MWPC\RECEIVED_2000_05_09\SEC_CONT7.DSN

Title	**STAR MWPC FEE RDO (SCB)**	
Size D	Document Number TRG120-E-3_3	Rev B
Date: Tuesday, March 09, 1999	Sheet 3 of 3	