REVISION RECORD			
LTR	ECO NO:	APPROVED:	DATE:

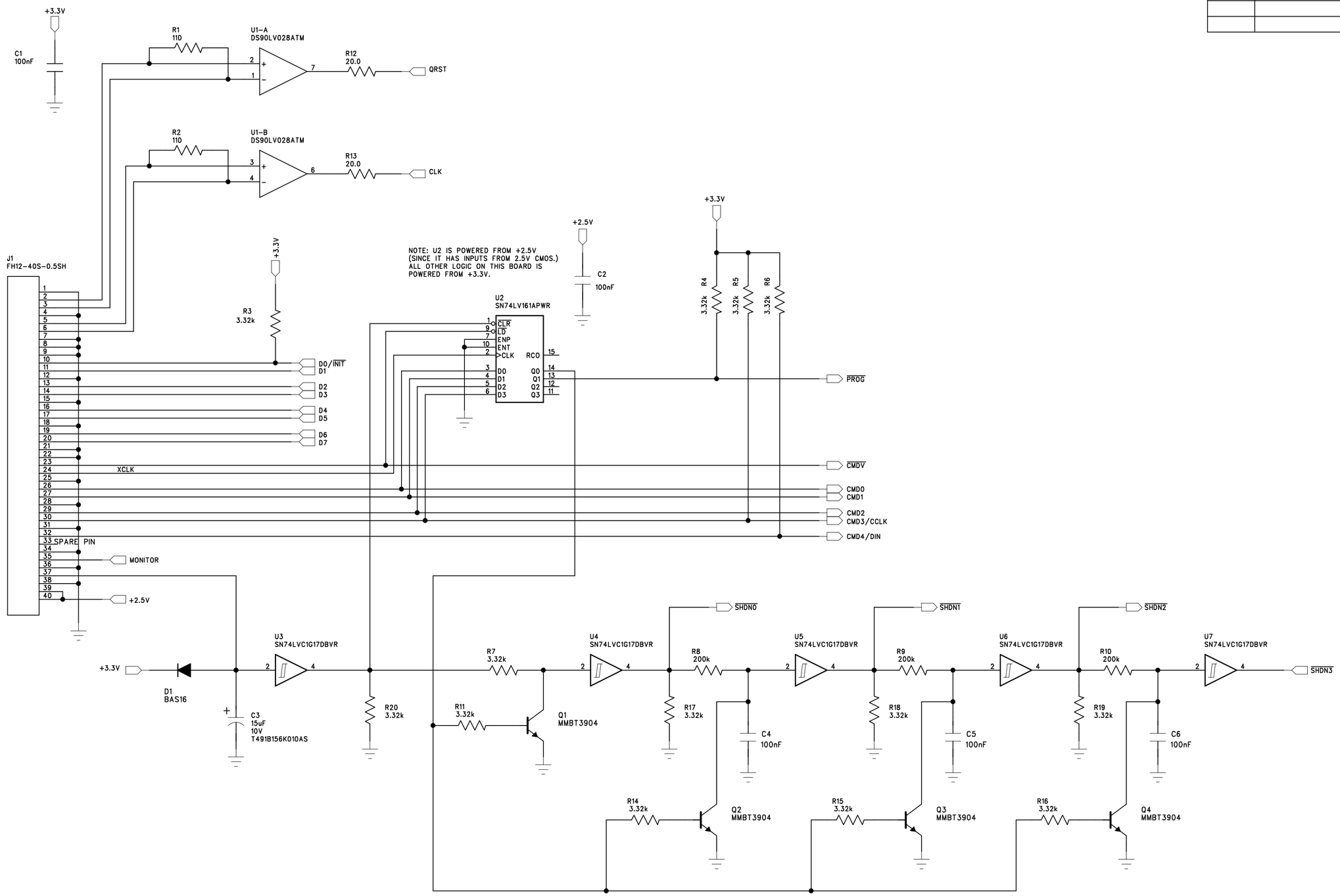

CONDITIONS REQUIRED TO ENABLE SUPPLIES ON FEE BOARDS:

A) +3.3 V SUPPLY IS ON,

B) AND POWERDOWN CONTROL BIT IS CLEARED,
(IT IS CLEARED DURING POWER-ON TIMEOUT)

C) AND POWER-ON TIMEOUT COMPLETE,

D) AND, FOR $\overline{\text{SHDN1}}$, $\overline{\text{SHDN2}}$, $\overline{\text{SHDN3}}$, SEQUENCE DELAYS HAVE TIMED OUT.

DRAWN: GERARD VISSER	DATED: 10 MAR 2003
CHECKED:	DATED:
QUALITY CONTROL:	DATED:
RELEASED: GERARD VISSER	DATED: 10 MAR 2003

INDIANA UNIVERSITY CYCLOTRON FACILITY

TITLE: STAR ENDCAP ELECTROMAGNETIC CALORIMETER
MAPMT FEE INTERFACE BOARD

CODE:	SIZE:	DRAWING NO:	REV:
		XXXXXX	A

SCALE: SHEET: 1 OF 2

REVISION RECORD			
LTR	ECO NO:	APPROVED:	DATE:

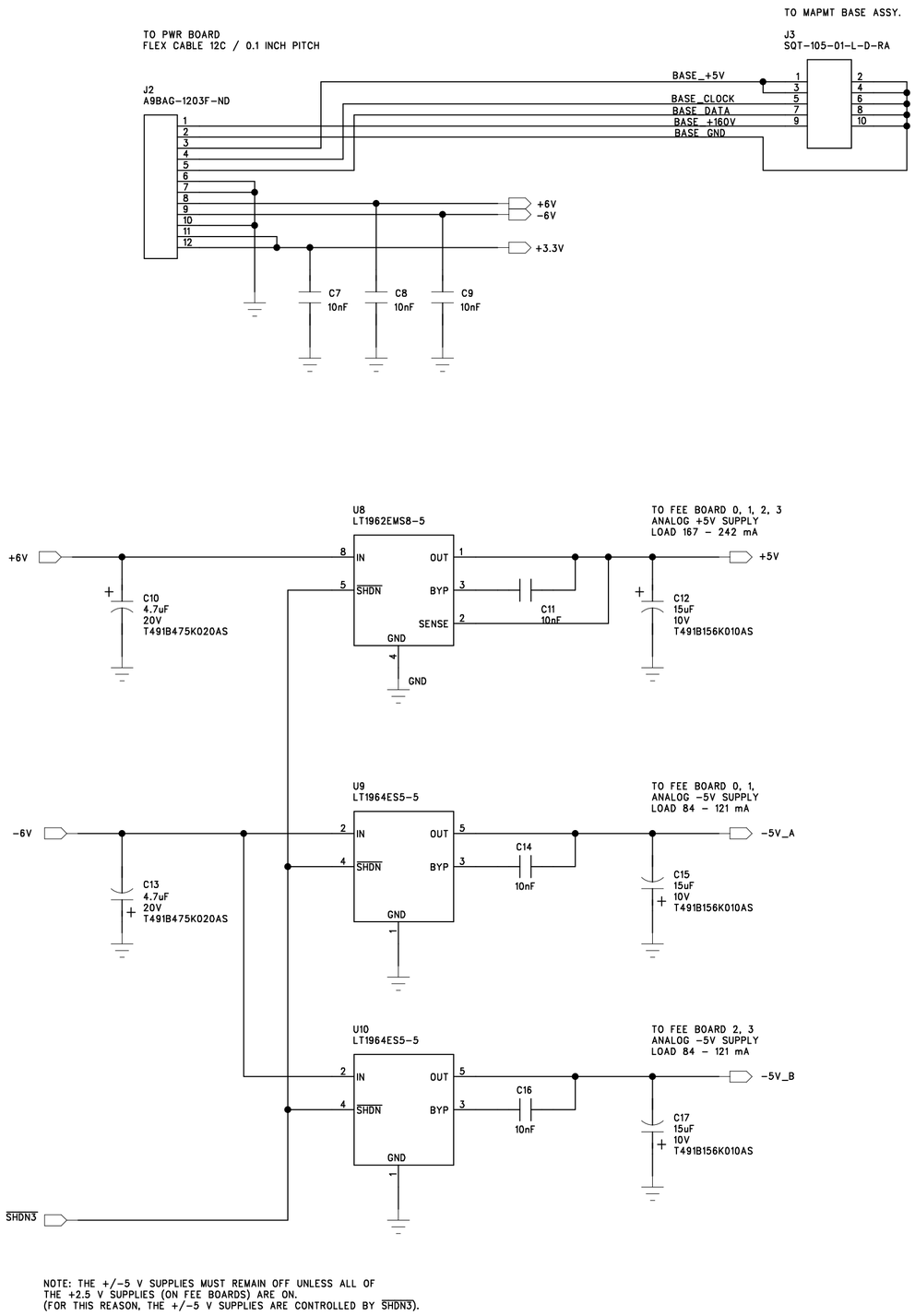

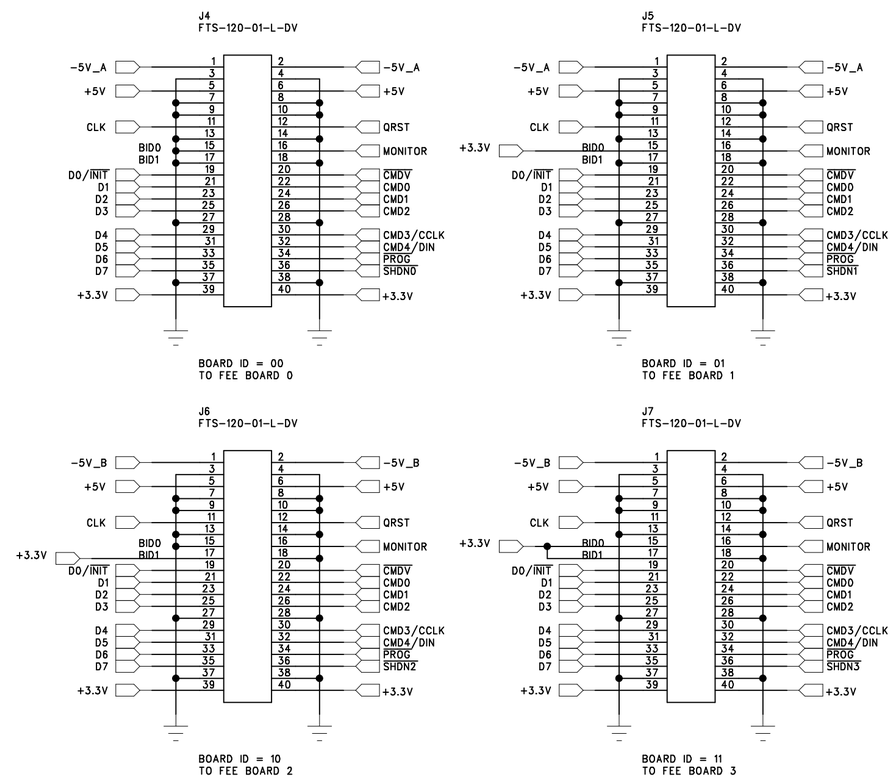

NOTE: THE +/-5 V SUPPLIES MUST REMAIN OFF UNLESS ALL OF
THE +2.5 V SUPPLIES (ON FEE BOARDS) ARE ON.
(FOR THIS REASON, THE +/-5 V SUPPLIES ARE CONTROLLED BY SHDN3).

INDIANA UNIVERSITY CYCLOTRON FACILITY

TITLE: STAR ENDCAP ELECTROMAGNETIC CALORIMETER
MAPMT FEE INTERFACE BOARD

DRAWN: GERARD VISSER	DATED: 10 MAR 2003	CODE:	SIZE:	DRAWING NO: XXXXXX	REV: A
CHECKED:	DATED:				
QUALITY CONTROL:	DATED:				
RELEASED: GERARD VISSER	DATED: 10 MAR 2003	SCALE:		SHEET: 2 OF 2	